KISTLER
measure. analyze. innovate.

New Biomechanics
Force Plates and Software

Andrea Poyer

Junior PM Biomechanics and Cutting Force

Standard Portfolio expanding in the sector of Sports

KISTLER
measure. analyze. innovate.

- Reliable, high precision
- Wide application range

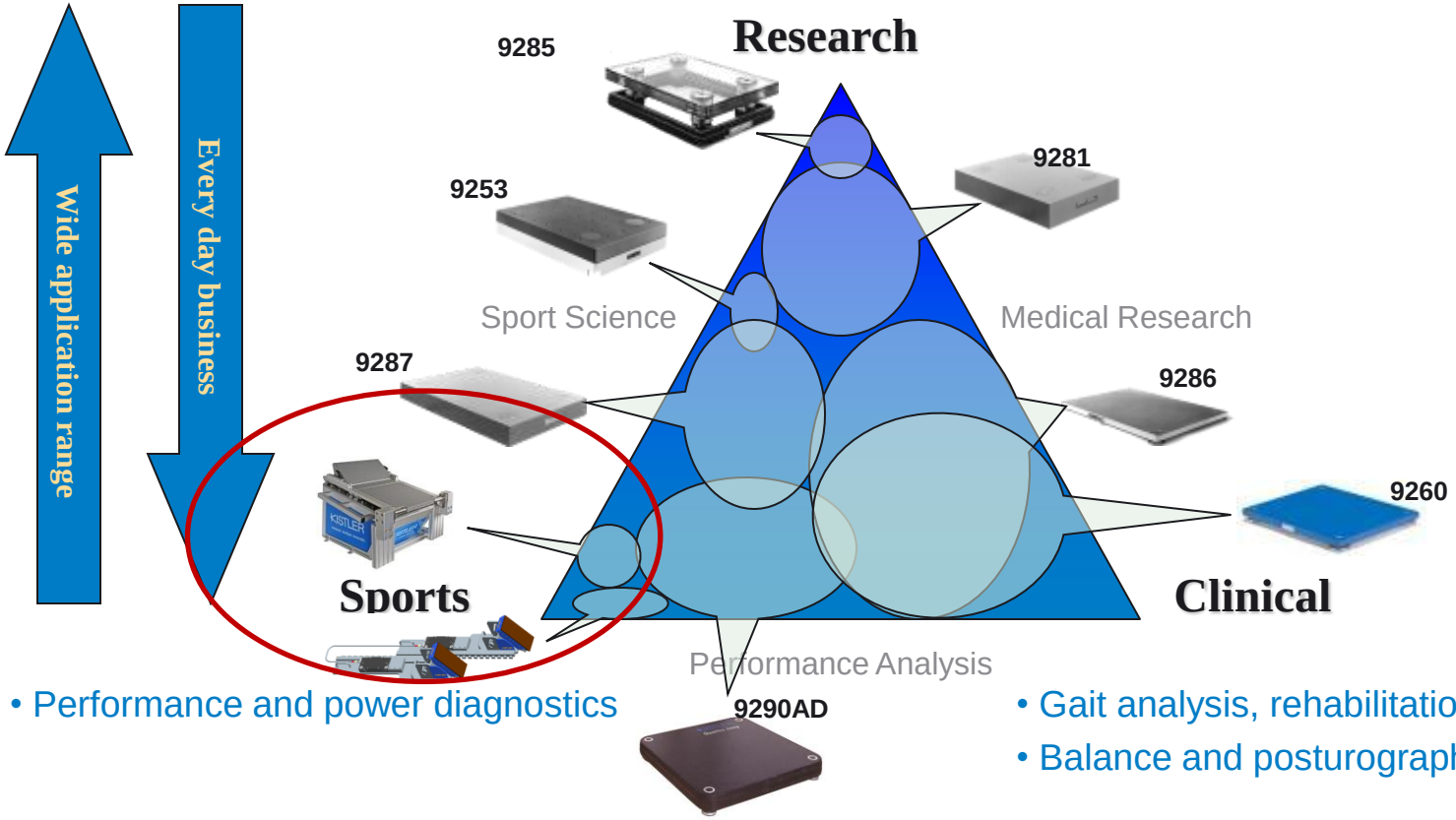

- Performance and power diagnostics

- Gait analysis, rehabilitation
- Balance and posturography

Instrumented Starting Block (Kistler Z21368)

- Force plate 740 x 520 mm
  - Fz, Fx, Fy, Mx, My, Ax, Ay
  - Fx,y 2.5 kN, Fz 10 kN
- IP65 with build in charge amplifier (output 5V)
- Light weight top plate.
- 2 force plates:
  front and rear with push off incline
- Incline for rear foot adjustable to different positions.

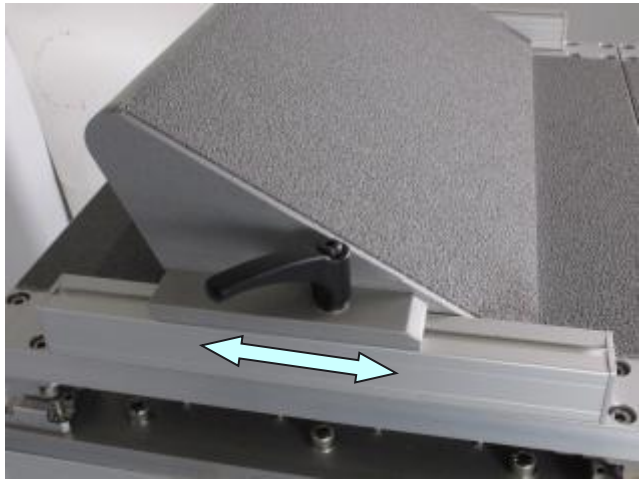

Starting block dynamometer for athletics (Kistler Z20982)

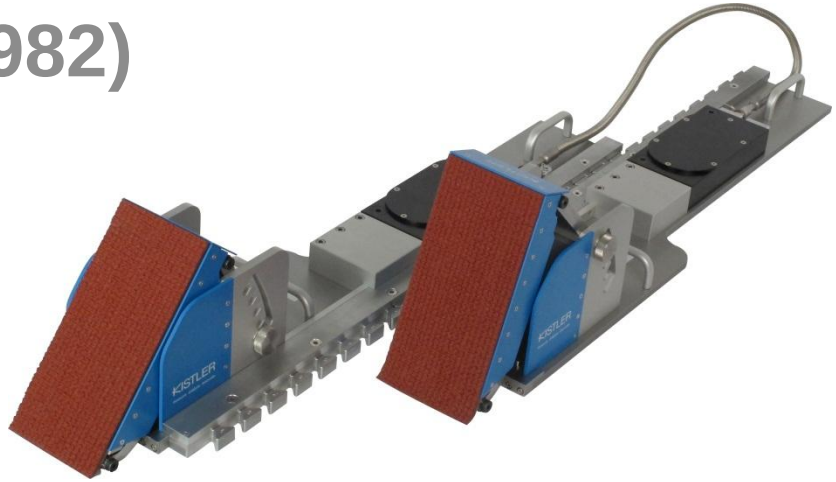

- Multi component force measurement
- Range
  - Fx, Fy -625…625 N max load: -2 ... 2 kN
  - Fz 0…2500 N max load: -8 ... 8 kN
- Intergrated standard electronics 8 ch (Fischer 19)
  - For each side: Fx, Fy, Fz1, Fz2
  - Degree of protection: IP 65
- Incline adjustable (5 positions; 50-70°)
- Standard ground spikes (replaceable)
- Weight 2x 15 kg

Adjust right-left in small steps

fixed with 2x 12 standard ground-spikes (6 or 9 mm)

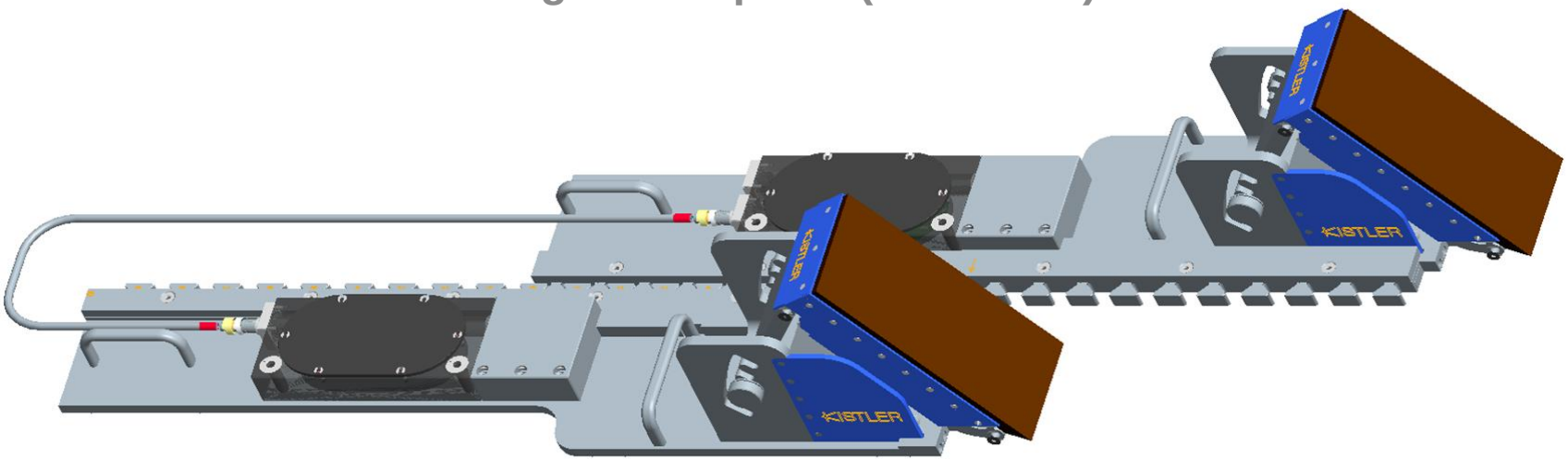

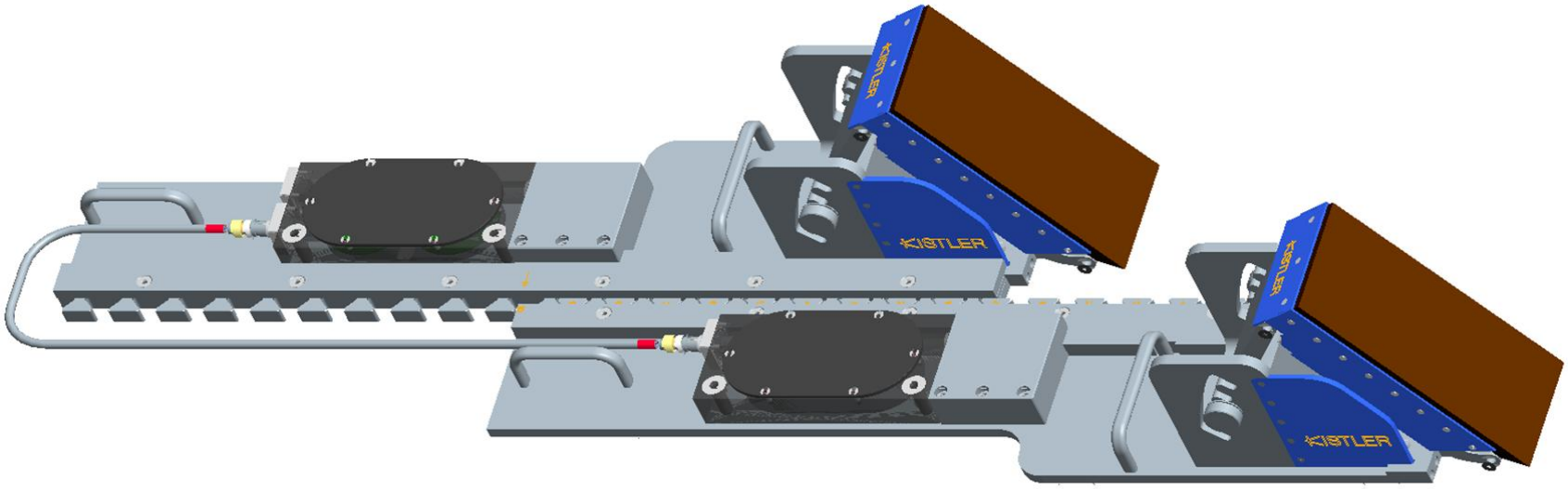

Incline 5x adjustable (50°-70°)

5° steps

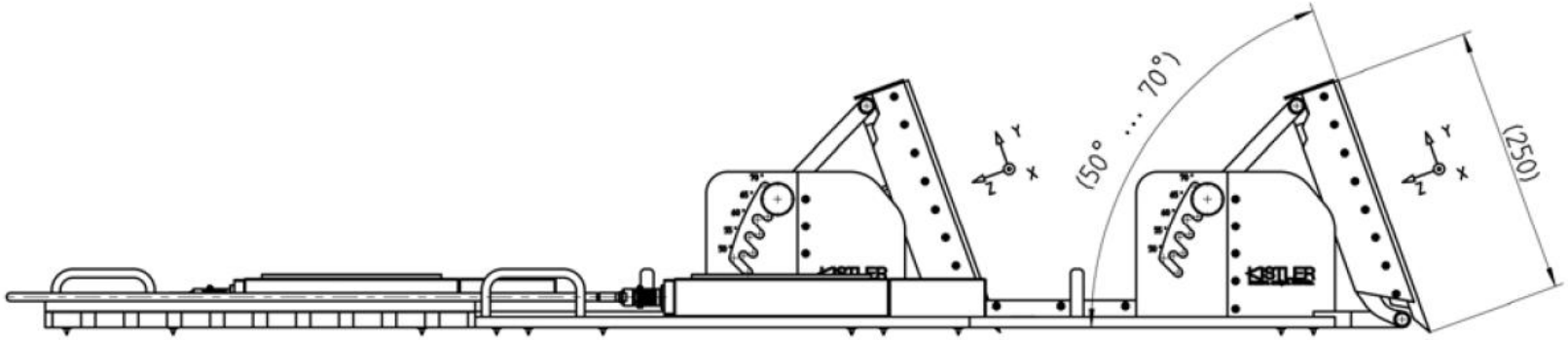

Analyzing force plate signals
Kistler MARS 2875A

KISTLER
measure. analyze. innovate.

Strength and Power

Frequency and Endurance

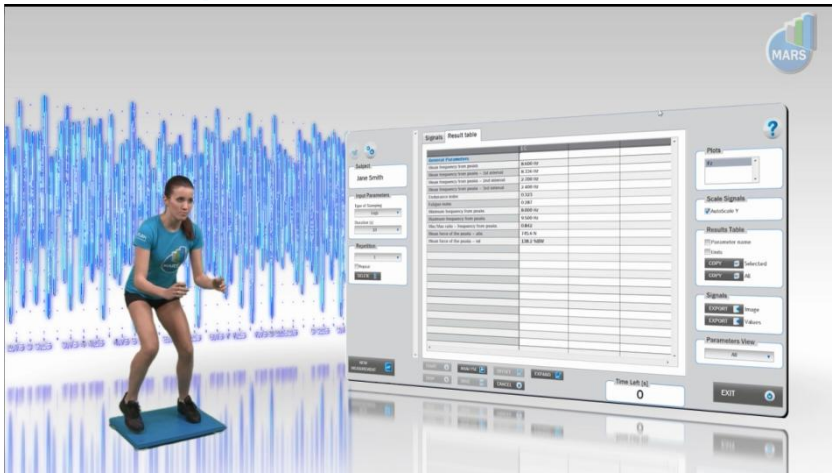

Balance

Basic Locomotion

Kistler MARS 2875A1

KISTLER
measure. analyze. innovate.

- Exclusive worldwide distribution by Kistler
- Developed by S2P
- Supports 5691A and 5695A USB DAQ and int. amps.
- Tutorial and Support Website mars.s2p.si
- Customer support directly by S2P
- Update free

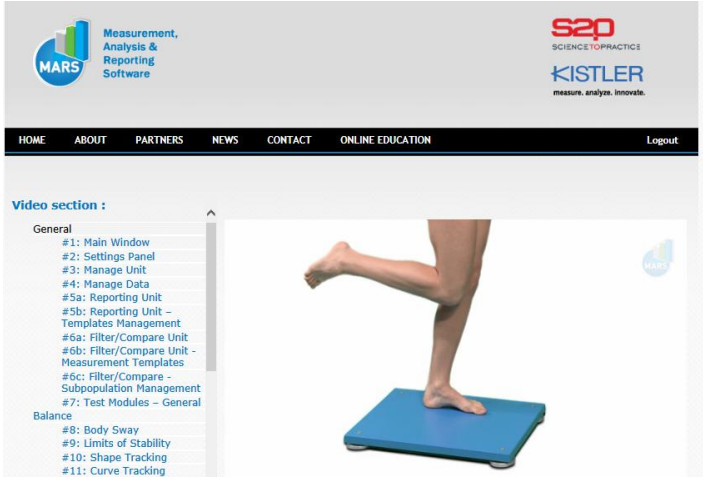

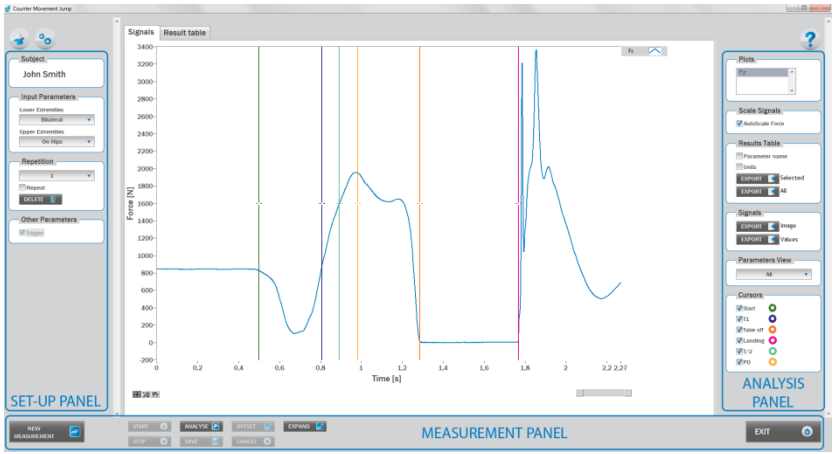

Why Kistler Biomechanics

KISTLER
measure. analyze. innovate.

1. Over 40 years experience in Biomechanics and Sports

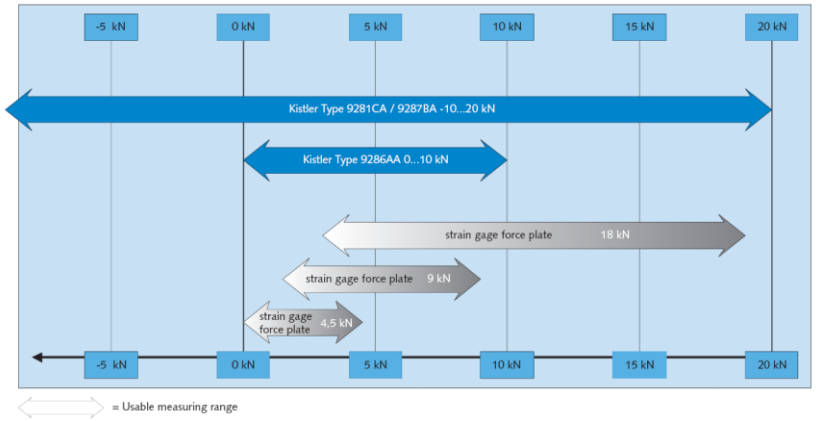

2. High versatility due to very large measuring range

3. High overload protection and virtually no aging

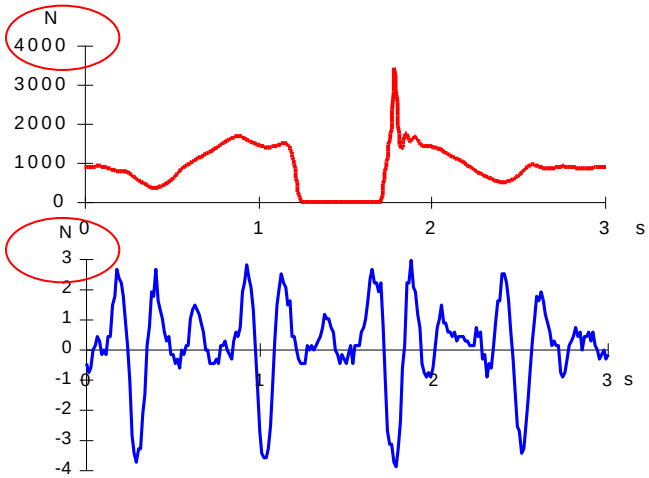

4. Reliable Specifications and Calibration

Kistler knows Biomechanics!

KISTLER
measure. analyze. innovate.